AI-107 Hot Air Sealing Machine

Operation Manual

is powered by

H&H Asia Group Limited

e = service@hh.com.hk
t = 852.24813068
f = 852.24813727

Room 1117, 11/F, Asia Trade Centre, 79 Lei Muk Road, Kwai Chung, N.T., Hong Kong.

Content

➢ Precautions with regard to Safety

Please observe these safety tips for safe, efficient, an injury-free operation of your equipment. By strictly following all instruction contained in this manual you will certainly obtain an excellent performance from the use of this equipment for years.

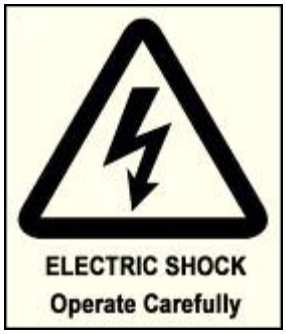

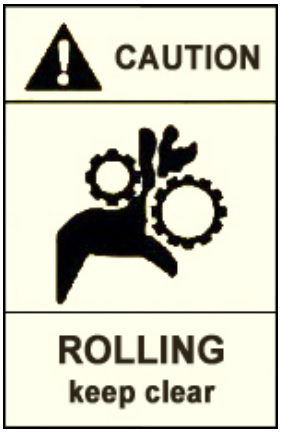


DANGER
ELECTRIC SHOCK
Operate Carefully


DANGER
HIGH TEMPERATURE
DO NOT TOUCH

➢ Name Plate

Model : AI-107

Hot Air Sealing Machine

spec A-NNN				
Voltage	Frequency	Power	Compressed Air	Weight
220 V	50/60 Hz	3600 W	0.4-0.6 Mpa	120 Kg
Date :			S/N :	

H&H Asia Group Ltd.

Room 1117, 11/F, Asia Trade Centre, 79 Lei Muk Road, Kwai Chung, N.T., Hong Kong

Tel : (852) 2481-3068 Fax : (852) 2481-3727

www.hh.com.hk

MADE IN CHINA

CE

➢ Introduction

Thank you for your choosing of AI-107 which is manufactured by H&H.

The hot air sealing machine described in this manual is one of the most sophisticated machines in the market today. Built on pure digital platform and designed for the professional users, AI-107 incorporated many new features that makes seam sealing much easier than before. Operators are recommended to have basic knowledge and skill in seam sealing operation before using this machine.

In order to fully understand how to use this machine properly, and avoid damage to both the machine and operating personnel, please read this manual carefully and keep it safe for future reference.

➢ Specifications

Model	AI-107
Voltage	220 V, single phase
Frequency	50/60 Hz
Power Consumption	3600 W
Compressed Air	> 0.4 Mpa
Air Consumption	100 L/min max
Nozzle Temperature	50 – 800°C
Positioning Speed	1 – 60 ft/min
Nozzle Width	22 mm standard, other optional
Upper Roller Width	25.4mm
Lower Roller Width	31 mm
Overall Dimensions	1200mm (L) x 700mm (W) x 1800mm (H)
Overall Weight	120 kg

Note: due to continuous improvement, specifications are subjected to change without prior notification.

➢ Features

- ✧ Control system – user friendly touch screen interface.
- ✧ Differential speed control for upper and lower press rollers, a great help to reduce the stretch and crease of the work piece.
- ✧ Digital tape releaser for stable operation.
- ✧ Large size color operate interface.
- ✧ Power saving mode.
- ✧ Multi-function foot pedal for an easy one-footed control operation.
- ✧ Multi-lngual support for touch screen display interface.

➢ Component Names

Front View

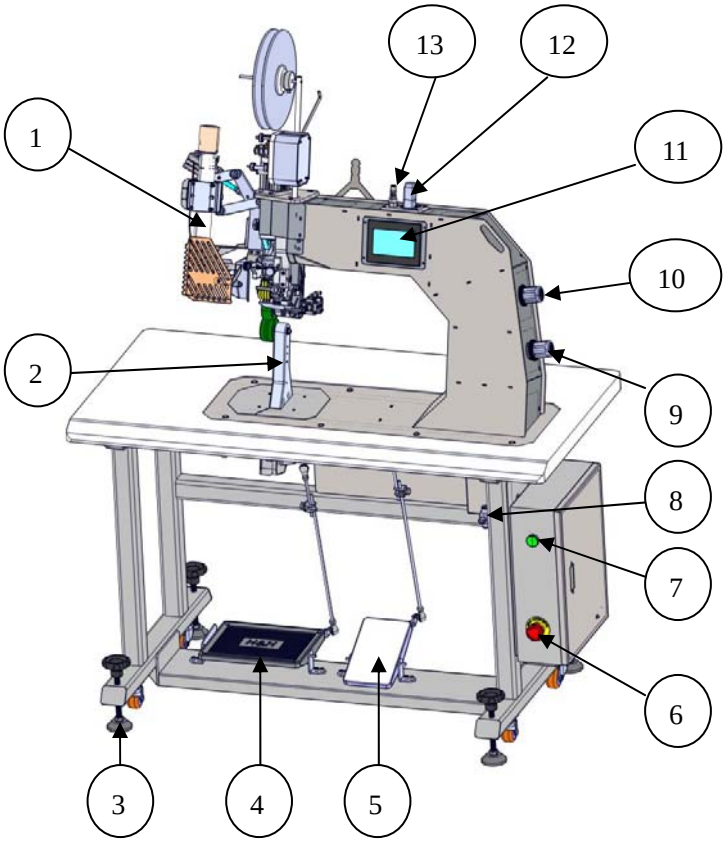

1. heater
2. lower pedestal
3. adjustable floor stand
4. left foot pedal
5. right foot pedal
6. emergency push button
7. start button
8. the compressed air supply switch
9. roller pressure regulator
10. nozzle air pressure regulator
11. touch screen control panel
12. the heater power outlet
13. the nozzle air inlet connector

Back View

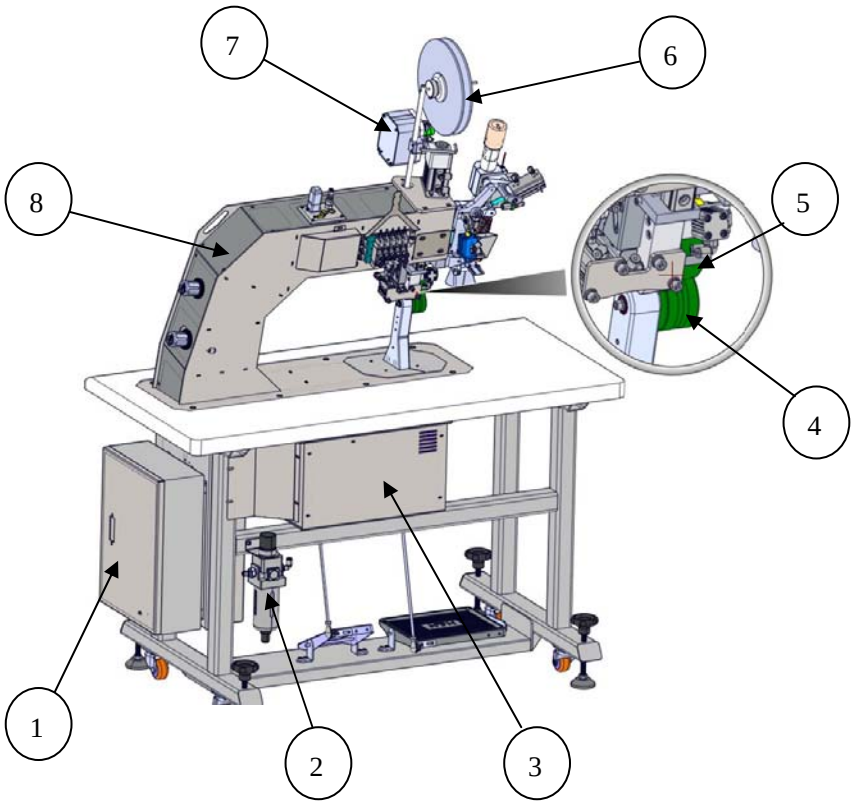

1. the main electrical box
2. compress air filter assembly
3. the motor drive electrical box
4. lower nip roller
5. upper nip roller
6. tape spool
7. tape tensioner
8. the main frame

Cutter assembly

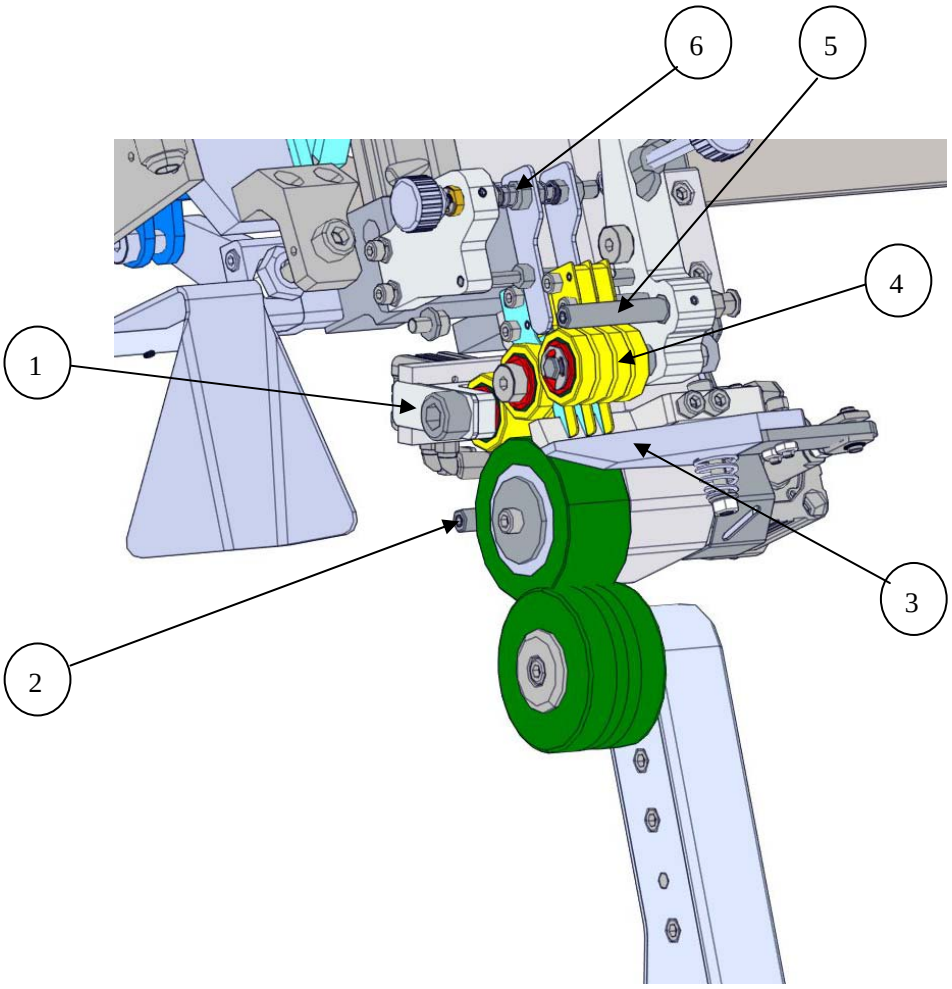

1. small tape clamping cylinder
2. the back blow hole
3. cutter blade
4. presser roller
5. the front blow hole
6. tape stabilizer

Partial view - 1

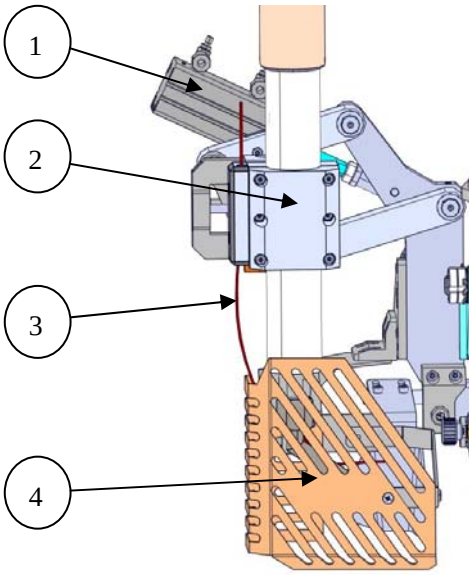

1. swing cylinder
2. heater fixture
3. temperature sensor
4. safety cover

Partial view - 2

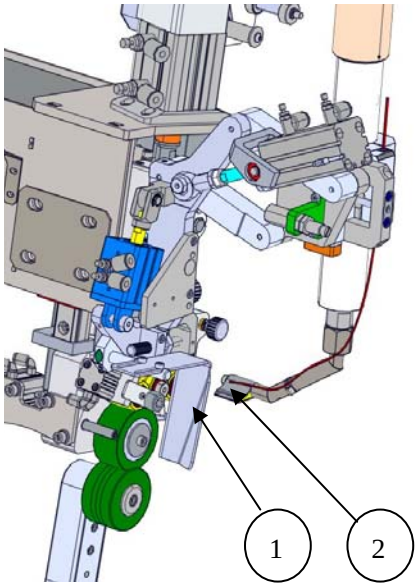

1. the heat deflector
2. nozzle

➢ Principle of Seam Sealing

The adhesive glue on the seaming tape will becomes vivid after heated up, let it place on the seaming sections of different clothes can bind them up like bonding after cool down. That bonding can refrain from water seeps in under a certain pressure.

A hot air machine, like AI-107, produces hot air with precisely controlled temperature to directly heat up the adhesive glue of seaming tape. Fabrics and the double faced adhesive tape will be sent into two corresponding positions between the slewing upper and lower rollers. The linear speed of the press rollers is also called the fringe pruning or double-side tape positioning speed.

During sealing, hot air is blowing out from the nozzle. The hot air that actually reaches the surface of the tape is a mixture of hot air from the nozzle and the surrounding air from the proximity. Hence the actual temperature that reaches on the tape is lower than the original nozzle temperature. The farther the distance between the nozzle and the tape, the higher the percentage of surrounding air slips in. On the other hand, a higher hot air flow rate will reduce the percentage of surrounding air causing the hot air temperature appears on the tape to be higher. So both the nozzle position and hot air flow rate are the most important factors for temperature control.

In general, the major factors that can affect the seam sealing are as follows:

Hot air temperature

Positioning speed

Nozzle air pressure

Air flow rate

Nozzle position

For a consistent product, the combination of the above factors have to be set precisely since their effects towards a proper sealing are all interconnecting.

➢ Preparation for Installation

Installation must be carried out by authorized personnel. Follow the steps below:

1. Position the machine on a flat surface and allow at least 50cm clearance on both sides as well as the back side, this is essential for the hot air ventilation and also to allow enough room for maintenance personnel to carry out necessary service and maintenance
2. Adjust the foot stand so that the machine is level and stable.
3. Loosen all packing cable ties and materials in order to free up all machine movements.
4. Connect the power plug to a suitable outlet with at least 16A capacity.
5. Locate the air hose supplied with the machine. Connect one end to the inlet of the compressed air water filter at the back side of the machine; connect the other end to a compressed air supply such as air compressor or central air supply. Make sure the compressed air supply has at least 0.6 Mpa (6 bar) of pressure and a flow rate of not less than 100L/min.
6. Install the tensioner at the top of the machine and align the tape spool at right angle to the working table of machine. (see diagram below)

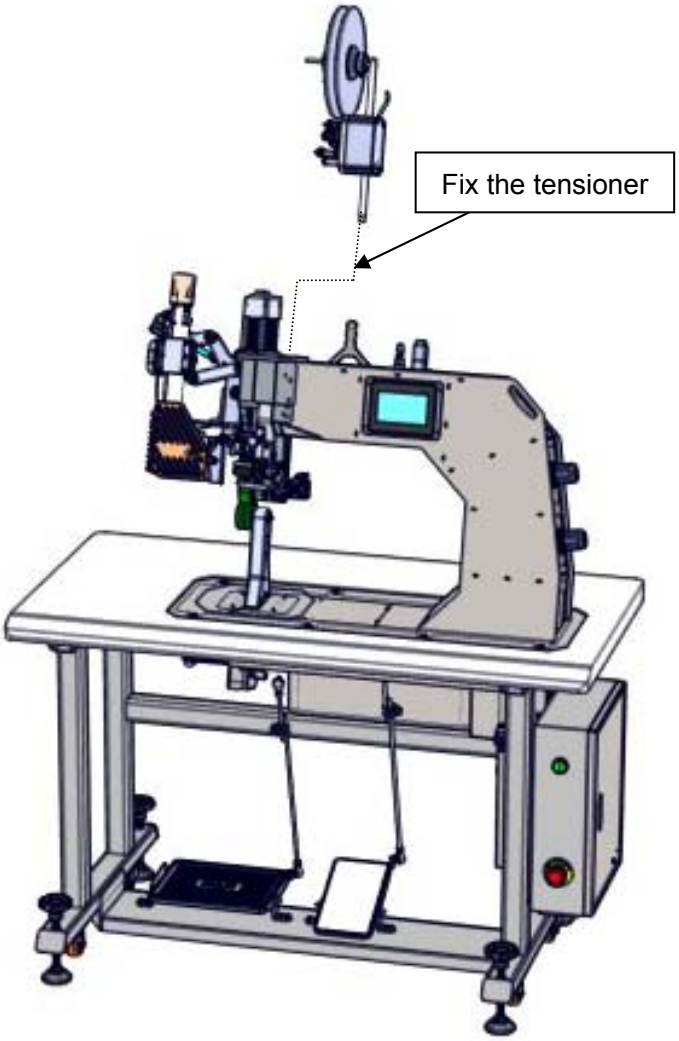

Fix the tensioner

7. Install a roll of seaming tape with the adhesive side facing the operator (refer to the section on tape feeding).
8. The machine is ready for operation now.
9. Power on. The touch screen panel will on and showing the program loading page. After a while, it will change to show the main control page.

Install tape

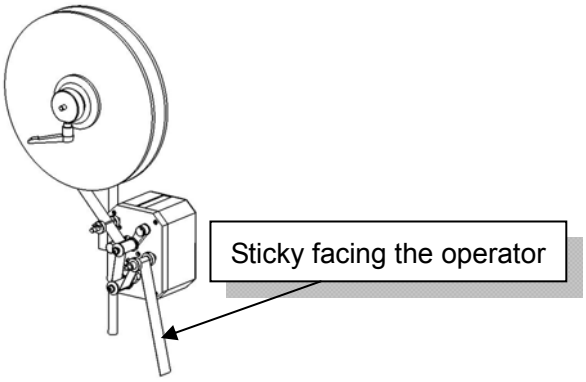

➢ Operation & Controls

■ Touch Screen Control

The welcome note & program loading pages will show up once the machine is powered on.

	
welcome note	program loading

You can input the parameters via the touch screen control panel only as a matter with a fingertip. Most of the setting and time control parameters can input onto the panel and change to different pages for different settings. The surface of the panel is covered with a membrane for protection. It can well protect the panel from gentle scratching. Nevertheless, we still recommend a careful and soft touch on it.

Warning: Do not attempt to use scissors, awl, needle, etc. to direct contact with it or a permanent damage will cause.

■ Main page -1

The page of the panel is named “main” which means it is the main control of the machine.

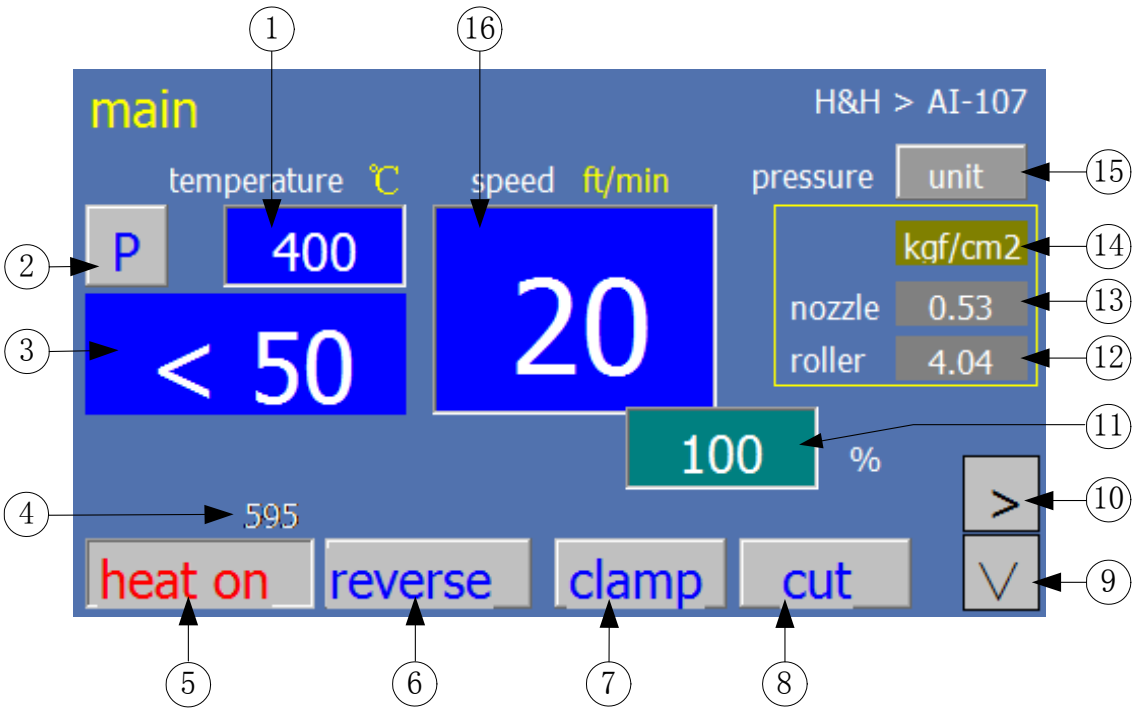

main page - 1

1. Nozzle temperature preset button & display.
2. Machine will be locked when this button was change to red. The machine can not work when it was locked to protect the user. You can use this button when you install the tape, and you need to lift this button when you finished or else the machine can not work.
3. Nozzle temperature feedback (real time temperature feedback). It will display “< 50”, when the temperature less than 50℃. Make sure the temperature is less than 50℃, when you turn off the power supply and compressed air.
4. This data will display if you turn on the “power save” button.
5. Nozzle heating on/off button. (text will turn red when the heater is on)
6. Press the reverse button to start reversing the rollers.
7. Small clamping cylinder on/off button.
8. To active the cutter. Tape feed will automatic start after cut off the tape.
9. Next page button. Turn to “parameter” page.
10. Next page button. Turn to “tape start” page.
11. Differential speed setting button.
12. The pressure between the upper and lower rollers.

13. The pressure of the nozzle.
14. Display the unit of the pressure. (MPa, Bar, Kgf/cm^2, psi)
15. Change the pressure unit.
16. Roller speed display & setting button. (3.3 ft≈1 m)

■ Main page -2

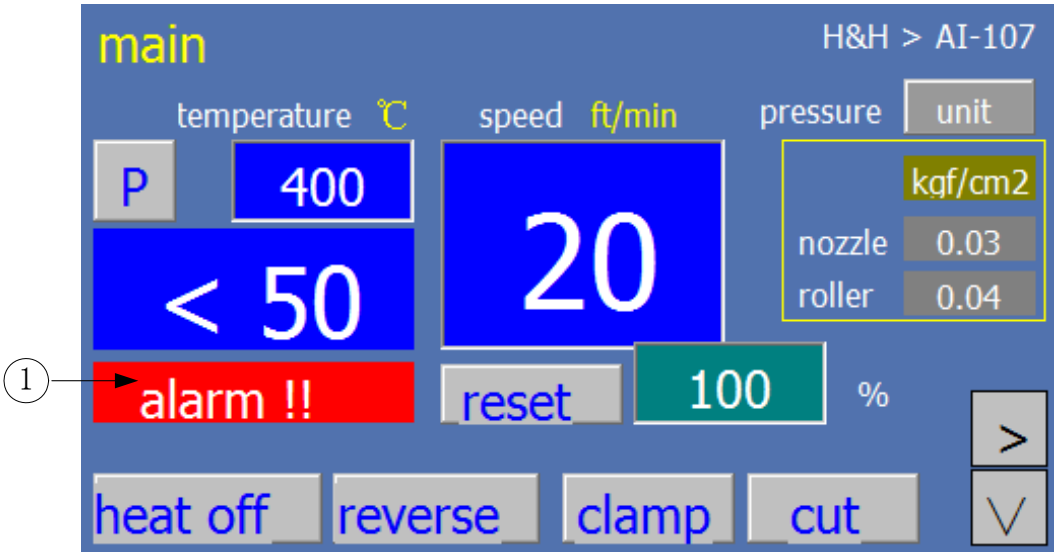

main page - 2

1. An alarm will display when there is/are any fault or beyond the parameter setting range.

■ Main page - 3

Preset the temperature of the nozzle.

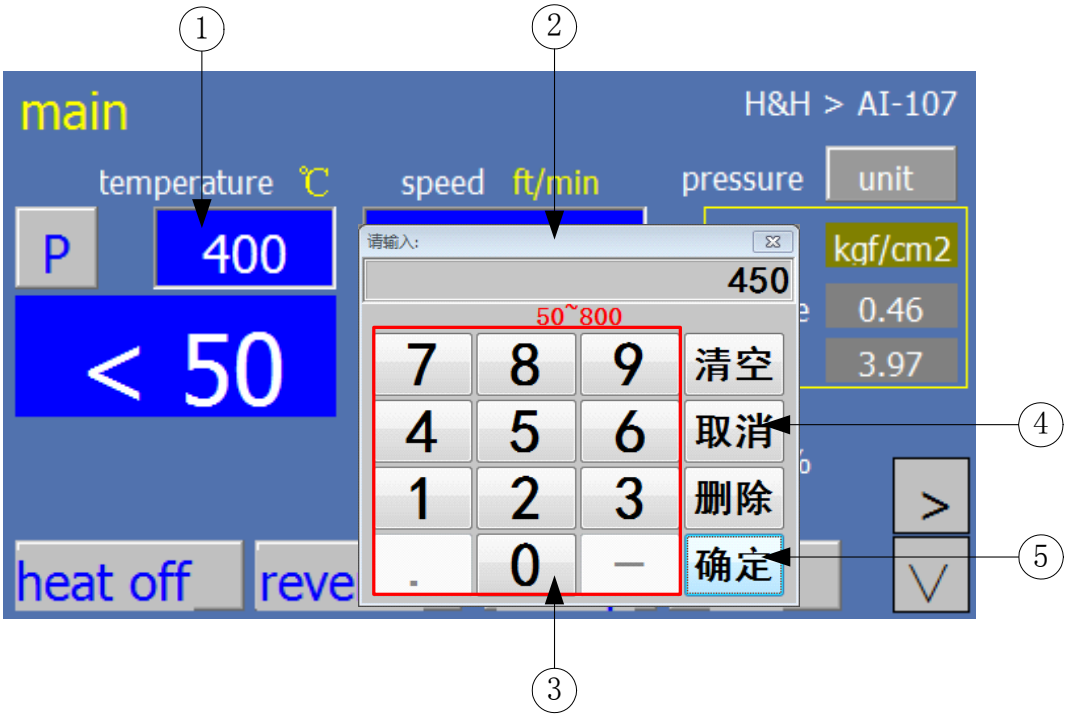

main page - 3

1. Nozzle temperature preset button & display.
2. Input key pad.
3. Input the data of preset.
4. Cancel.
5. Inputs accept.

Press button #1 can preset the nozzle temperature. The key pad #2 for heat temperature setting will pop up. You can enter the heating setting via this interface (input range 50~800℃) and confirm with the button #5 “ok” or if the original default setting is satisfied. Press button #4 “cancel” if there is no need to change.

Other data setting such as speed of the roller, motor delay etc. are similar to the setting of nozzle temperature. This manual will not describe in detail.

■ Tape start

Press #10 button on the main page, will turn to “tape start” page.

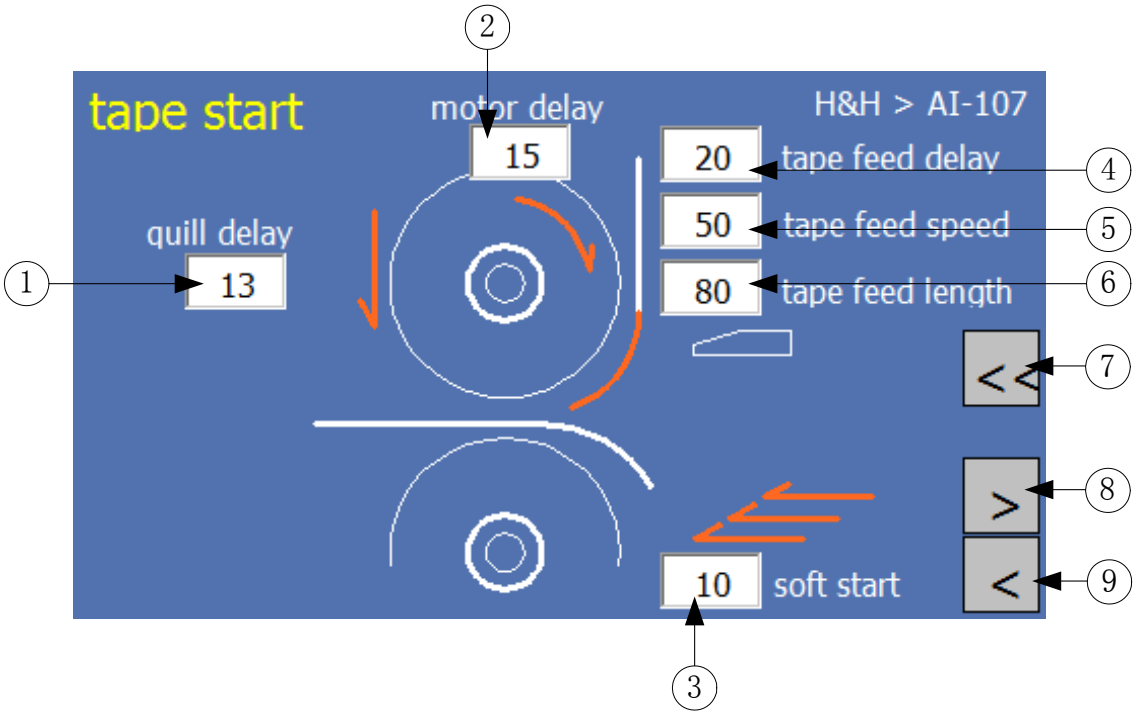

1. Quill delay. Upper roller will delay to press down in the state of tape start.
2. Motor delay. Setting the delay time of motor start in the state of tape start.
3. Soft start. Setting the acceleration and deceleration process of the motor in the state of tape start.
4. Tape feed delay. Setting delay time of tape feed after cut off the tape.
5. Tape feed speed. Setting the speed of the tape feed after cut off the tape.
6. Tape feed length. Setting the length of the tape feed after cut off the tape.
7. Go back to the “main” page.
8. Go to the next page. The next page is the “tape middle” page.
9. Go back to the previous page. The previous page is the “main” page.

■ Tape middle

Press #8 button on the “tape start” page, will turn to “tape middle” page.

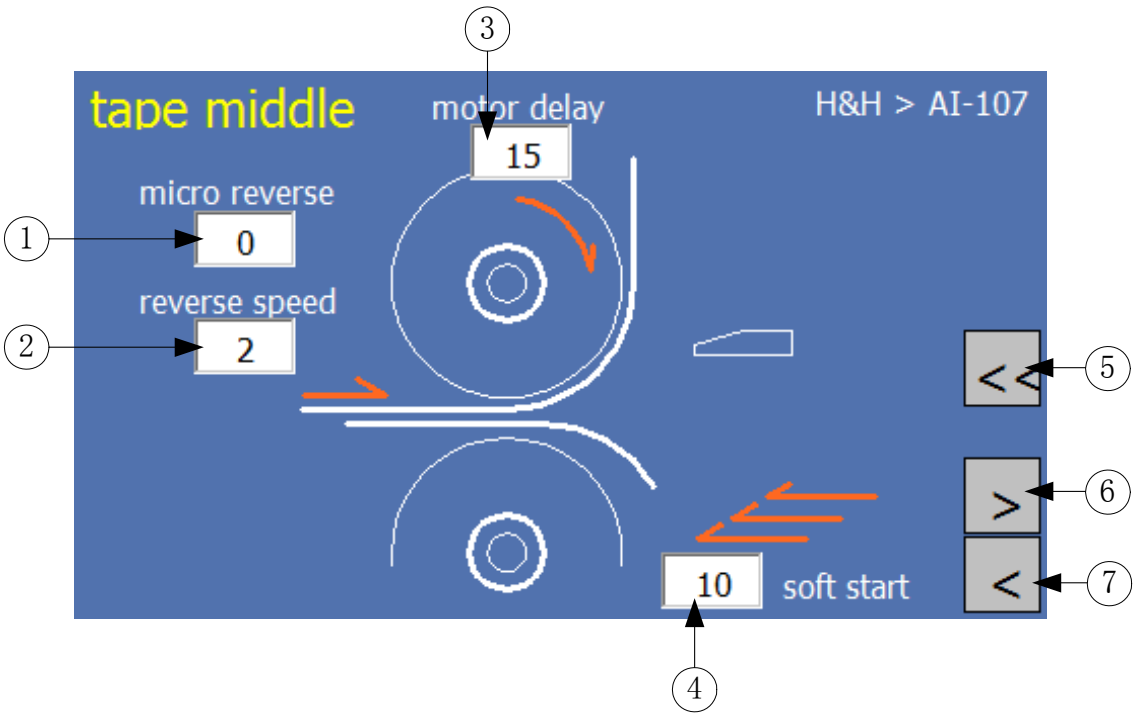

1. Micro reverse. The motor will reverse when the sealing process was paused.
2. Reverse speed. Setting the speed of the motor reverse.
3. Motor delay. Setting the delay time of motor start in the state of tape middle.
4. Soft start. Setting the acceleration and deceleration process of the motor in the state of tape middle.
5. Go back to the “main” page.
6. Go to the next page. The next page is the “tape end” page.
7. Go back to the previous page. The previous page is the “tape start” page.

■ Tape end

Press #6 button on the “tape middle” page, will turn to “tape end” page.

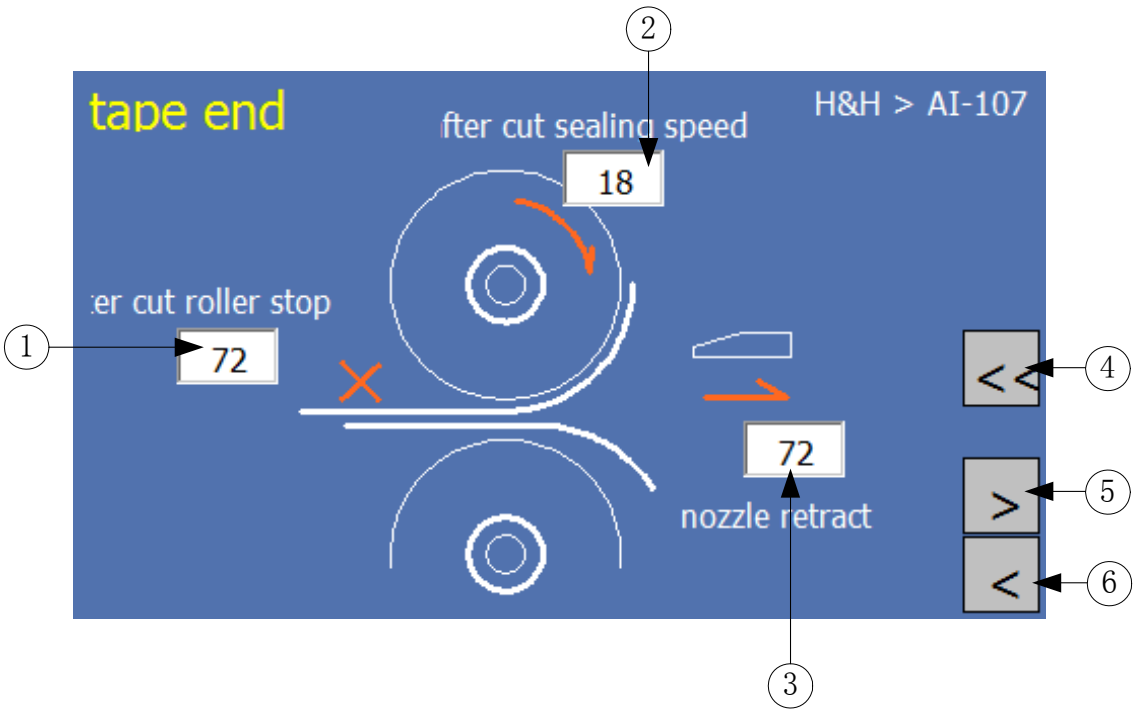

1. After cut roller stop. Setting the delay time of the motor stop after cut off the tape.
2. After cut sealing speed. Setting the speed of the motor after cut off the tape.
3. Nozzle retract. Setting delay time of the nozzle retrun back after cut off the tape. The value of “after cut roller stop”can not be smaller than the value of “nozzle retract”.
4. Go back to the “main” page.
5. Go to the next page. The next page is the “main” page.
6. Go back to the previous page. The previous page is the “tape middle” page.

■ Preferences

Press #9 button on the main page, will turn to “preferences” page.

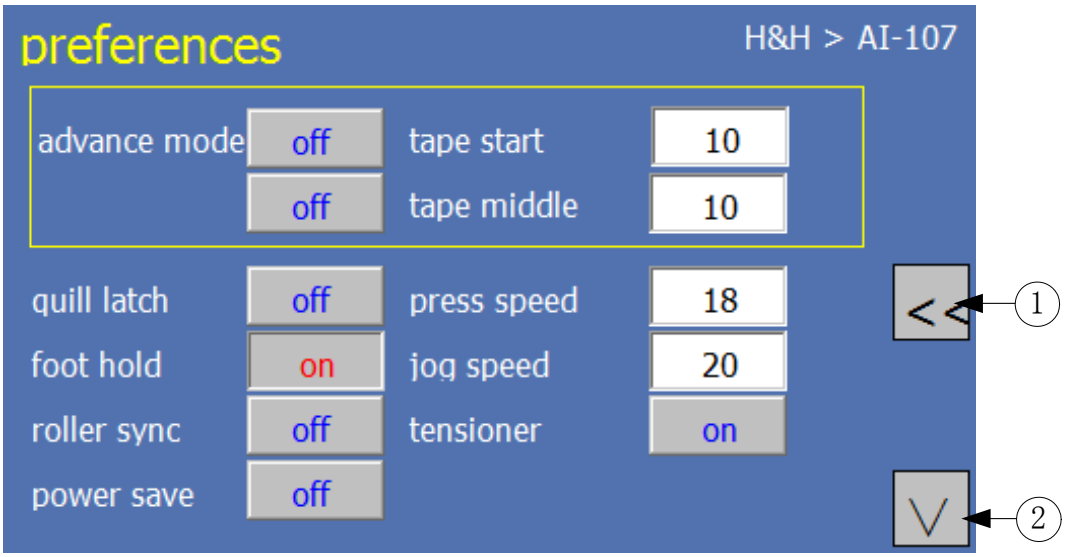

Advanced mode.

When advanced mode is on and no action to the machine, the nozzle will stop beside the roller a certain time before it return back.

Quill latch.

On. The upper roller will stay in the upper position after cut off the tape.

Off. The upper roller will goes to the lower position aftre cut off the tape.

Foot hold.

On. Machine will run according to the parameters of tape end after cut off the tape.

Off. Machine will run up to the control of operater.

Roller sync.

On. The lower roller will run togother with the upper rooler after cut off the tape.

Off. The lower roller will stop though the upper roller is running after cut off the tape.

Power save.

When power save is on, the main page will show 10 minutes (600 seconds) countdown (#4 in main page - 1). The heater consumes significant amount of electricity during operation. The Power save mode enables the machine to turn off the heater after

10 minutes of idling, therefore reducing the electricity cost.

Press speed.

Keep press the right foot pedal after cut off the tape. Then, active the left foot pedal. The speed of the motor is press speed.

Jog speed.

Setting the motor speed when active the right foot pedal only.

Tensioner.

On. The tensioner will work once the left foot padal was actived.

Off. The tensioner will work only when the position sensor of the tensioner was actived.

1. Go back to the “main” page.
2. Turn to the next page. (the next page is the “alarm” page)

■ **Alarm**

The next page after “preferences” page is the “alarm” page.

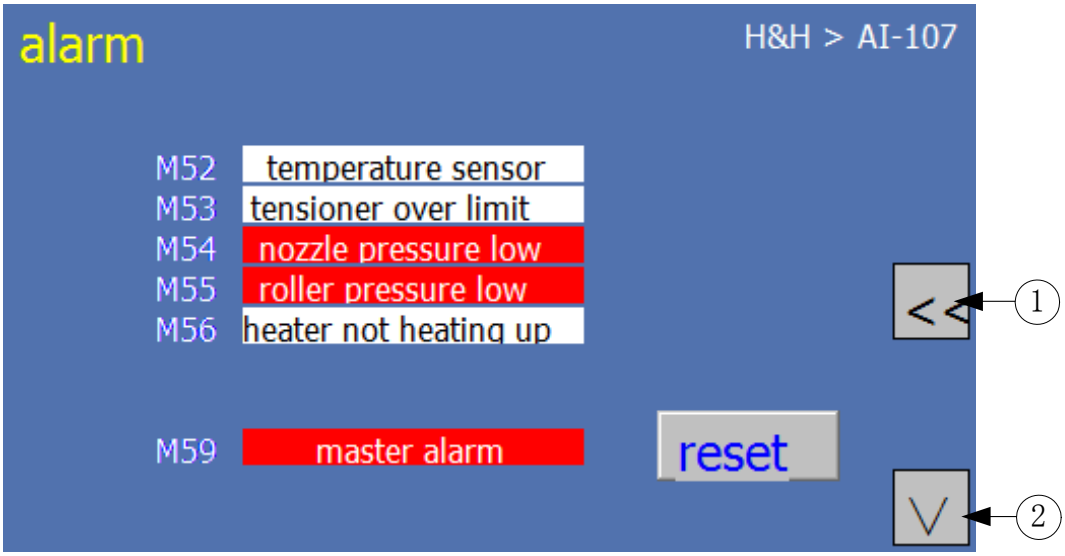

Push the “reset” button once to clear the previous alarm.

Red background means this item has problem. White background means this item is normal.

Temperature sensor

If this item has problem, we need to check the connect wire of the sensor. Reset the alarm when it was modified.

Tensioner over limit

If this item has problem, we need to check the roller of the tensioner. Reset the alarm when it was modified.

Nozzle pressure low

In order to protect the machine, there will be alarm when the pressure of the nozzle is less than a certain value. Adjust the pressure and you can reset the alarm.

Roller pressure low

In order to protect the machine, there will be alarm when the pressure of the roller is less than a certain value. Adjust the pressure and you can reset the alarm.

Not heating up

There will be alarm when the heater can not heating up. If this item has problem, please check the heater, the temperature and the connectors then reset the alarm.

Master alarm

Any one of the alarm will be reflected in the master alarm. Master alarm reset button on the right side for a button to reset all alarm items. When the alarm can not be lifted total, please check the alarms one by one. Reset the alarm when all of the alarms are removed.

#1, go back to the “main” page.

#2, turn to the next page. (The next page is the “monitor” page)

■ Monitor

The next page after “alarm” page is the “monitor” page.

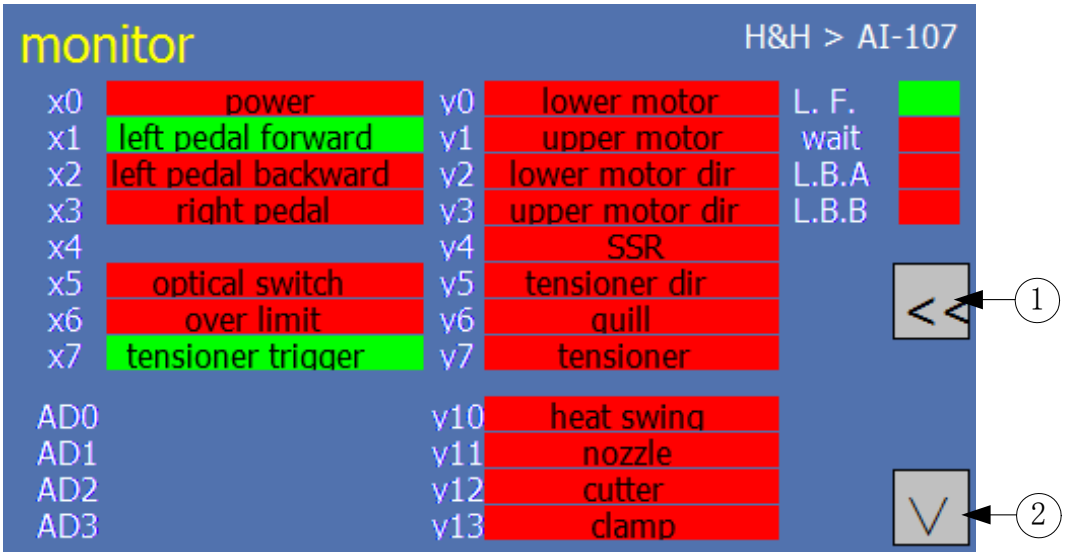

You can observe which limit switch is/are triggered in green, otherwise it will on red colour.

#1, go back to the “main” page.

#2, turn to the next page. (The next page is the “program version” page)

■ Program version

The next page after “monitor” page is “program version” page.

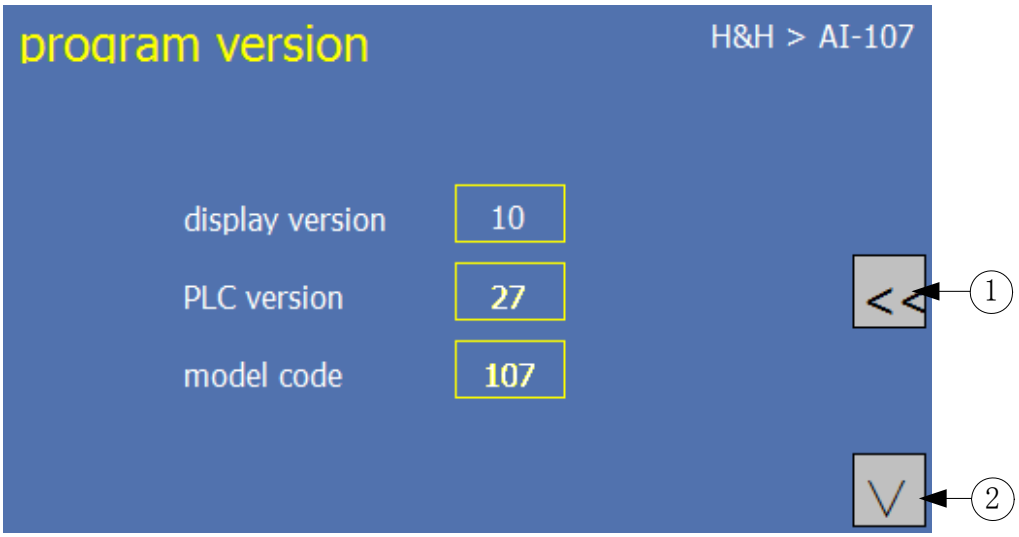

It is an information page for your reference and we can use these data for future maintenance usage.

#1, go back to the “main” page.

#2, go to the next page. (The next page is the “language” page)

■ Language

The next page after “program version” page is the “language” page.

#1, you can change the language between English, Chinese and Vietnamese.

#2, go back to the “main” page.

#3, go back to the next page. (The next page is the “password” page)

■ Password

The next page after “language” page is “password” page.

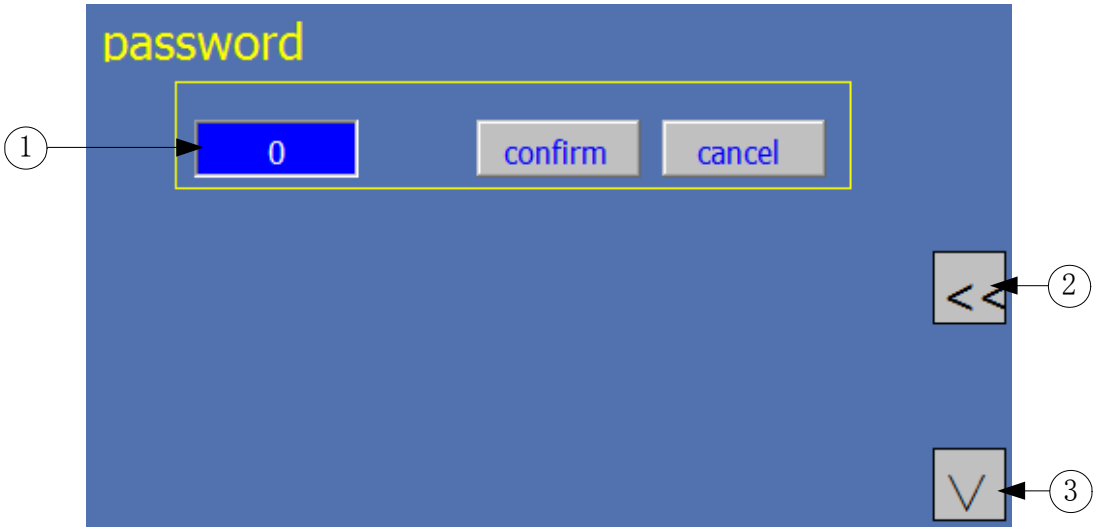

#1, you can input the password. The information of password preset will pop up if the correctly password was inputted. The initial password is “22222”.

#2, go back to the “main” page.

#3, go back to the previous page. (The previous page is the “main” page)

■ Password

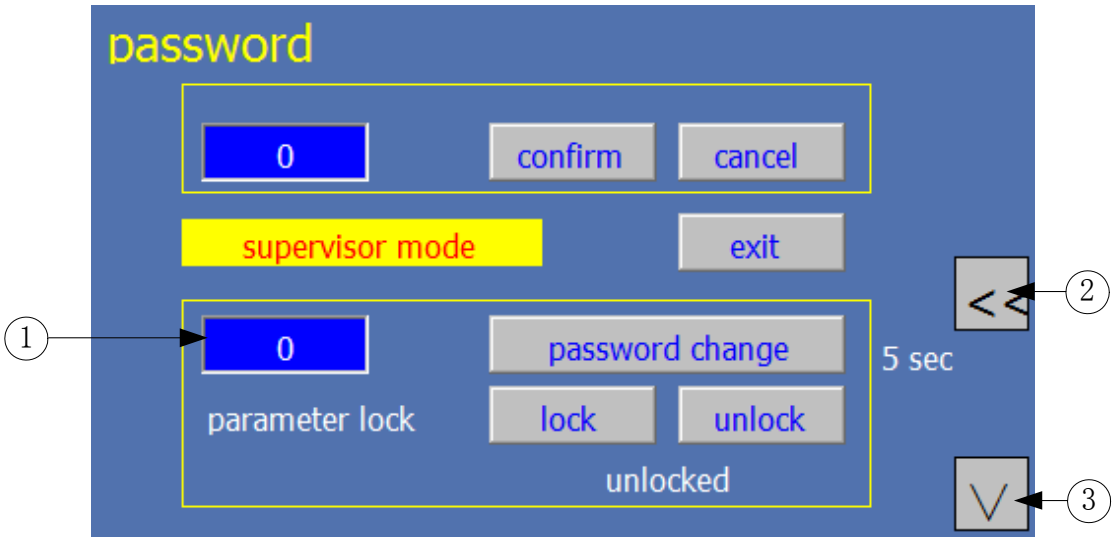

#1, you can input the new password. Press the button “password change” 5 seconds, and the password will be changed.

#2 and #3 go back to the “main” page.

■ Foot pedal control

There are 2 foot pedals for the machine. The design of these pedals is such that they can be operated individually. As a result, the operator's hands are free to manipulate the processing fabric.

Left foot pedal

The left pedal is a multi function pedal. You can use it to raise the upper roller and start sealing.

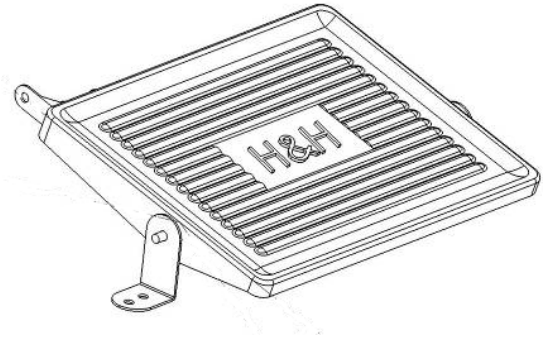

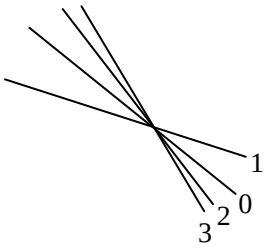

The status of left foot pedal is "0" when it idel. It can forward to "1" and backward to "2" and "3".

To raise the upper roller — heel back the left foot pedal.

To start sealing — press forward.

Right foot pedal

Active right foot pedal, the roller will start to forward and the nozzle not work.

Maintenance

Preventative

In order to keep the machine in top running condition, regular maintenance is important for trouble free operation. This will minimize possible down time and to prolong machine life.

Daily

- Check the motion of the machine for smoothness and strange noise.
- Check the air hoses for leakage or damage.
- Check silicone roller for worn or damaged.

Weekly

- Check all rollers for excessive play, all play should be less than 5 mm, adjust the corresponding cam belt tension if necessary.
- Lubricate the cutter blade slightly with machine oil. Wipe off any excessive oil if necessary.
- While the machine is off and cooled, test the circuit breaker by pressing the test button. The handle should flip to OFF immediately.
- Check the speed of the nip roller cylinder. Adjust the speed by the air speed regulators located under the touch screen control panel if necessary.
- Visually inspect all the electrical and mechanical parts for abnormal burns and looseness.
- Check the nozzle air pressure interlock: lower the nozzle air pressure gradually to below 0.05 Mpa, an alarm message should appear and the heater power will be cut off followed by a drop in heater temperature.
- Next increase the air pressure, the alarm message ‘pressure low’ in the page ‘main’ should disappear.

- **As Required**
  - Clean the rollers to remove any adhesive residue, which may cause fabric wrapping.
  - Replace the silicone roller by a new one if necessary.
  - Replace heater element if damaged, be careful not to allow material being broken off from the old element causing blockage to the air passages.
  - If nozzle is blocked, remove the nozzle from the heater and tap it gently to release foreign material from the inlet side.

Procedures for Replacing Parts

- **Temperature sensor**

The tip of the replaced thermocouple is very important, the location must be the same as shown in the below diagram. Also inspect and make sure that the tip is in the center of the pipe and not touching the metal part. This is essential for the sensor to measure the air temperature correctly.

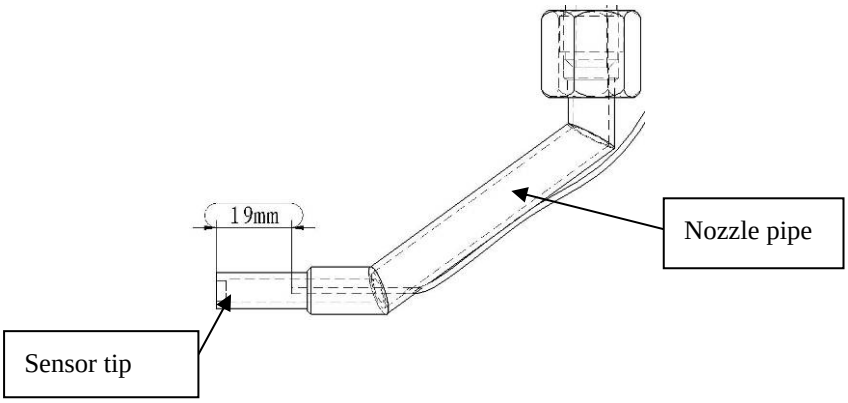

- **Heater Element**

Remove the heater top cap and the heater securing mount to locate the heater element. Carefully pull the element off the connecting sockets. Replace the broken element with a new one; make sure that the red colored sealing gasket is installed properly. Installation is just the reversal. After replacing a new

heater element, run the machine at 300℃ for at least 10 minutes to break in the heater before operating at higher temperature.

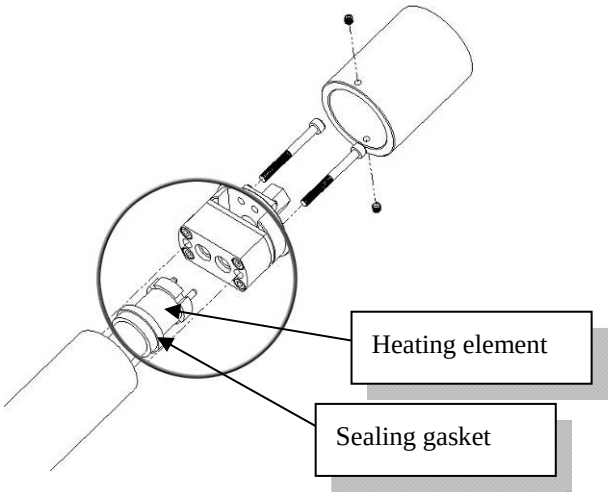

- **Rollers**

The rollers are needed to be replaced when there are signs of torn or excessive worn in order to maintain the consistence of quality of the finished product. Replace the rollers as shown in the illustration below. Please choose the correct width and softness roller. For best result, always use genuine H&H parts for replacement. Please contact us for optional sizes.

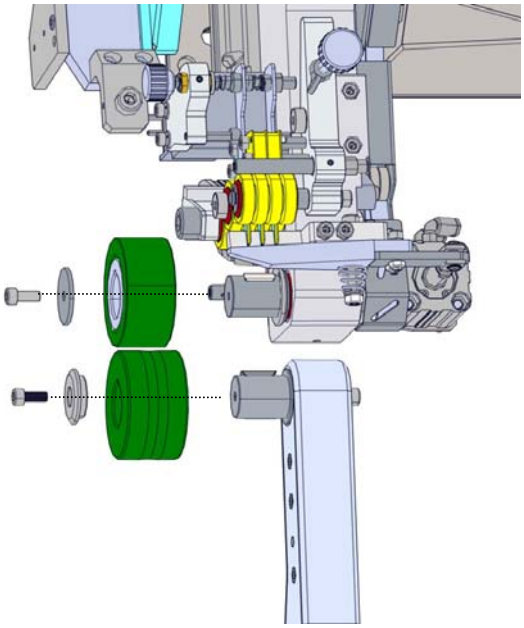

Trouble Shooting

Problem	cause	solution
No power in some places	Power cable or plug faulty	Check the power supply connection
	Circuit breaker tripped	Reset circuit breaker and investigate the cause
	Main power switch not turned on	Press the power ON button (start)
	Bad connection	Check all wires for loose connection
	Faulty transformer	Check the voltage of switching power supply
Motor not turning	Nozzle in park position	Un-park the nozzle
	Faulty Main controller	Replace a new controller
Temperature display not stable	Faulty thermocouple	Replace a new temperature sensor
	Loose thermocouple connection	Check and secure the connection
	Faulty temperature controller	Replace PCB in the main electrical box
	Thermocouple extension wire short circuit	Find the location and fix
	Thermocouple not installed in proper position	Check the position of sensor tip and fix
Temperature display read ambient at all time	Heater is not turned on	Press HEAT to enable heater
	Air pressure too low	Inspect if air supply is cut off
Temperature fluctuate abnormally	Broken heater element	Replace heater element
	Faulty thermocouple	Replace thermocouple
	Hose tangled	Check for hose clearance or pinch during heater movement
	Line voltage fluctuation	Install voltage regulator
	Loose object in air passage	Remove nozzle and clean the foreign material
Heater Not heating	Faulty solid state relay (SSR)	Replace solid state relay
	Pressure low interlocked	Increase nozzle air pressure
	Heater broken	Replace heater element

➢ Appendix A Nozzle Air Flow Cross Reference Table

Nozzle air pressure (Mpa)	Air flow (L/min)
0.05	35
0.06	38
0.07	40
0.08	42
0.09	45
0.10	48

➢ Appendix B Electrical Scheme

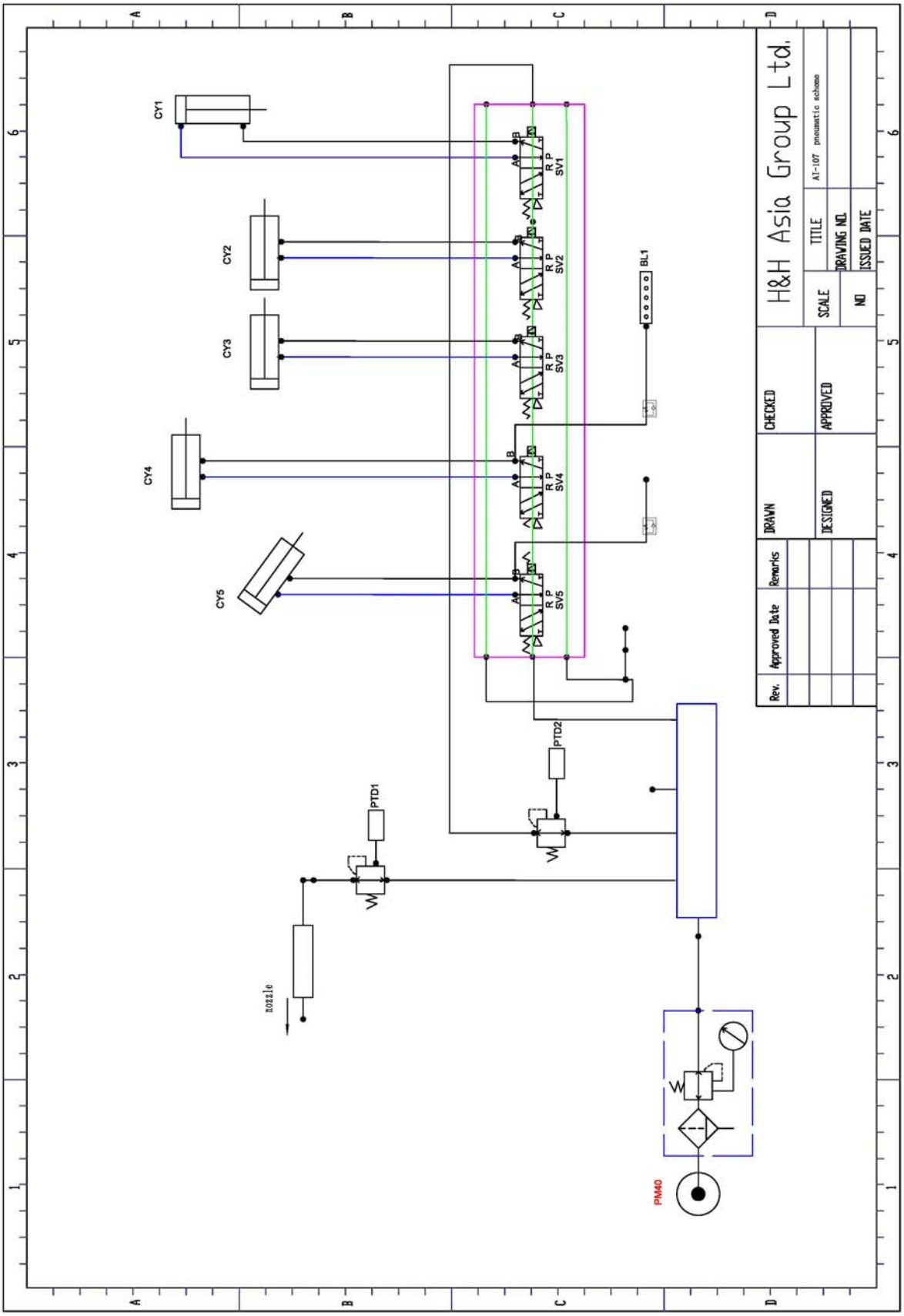

➢ Appendix C Wiring Scheme

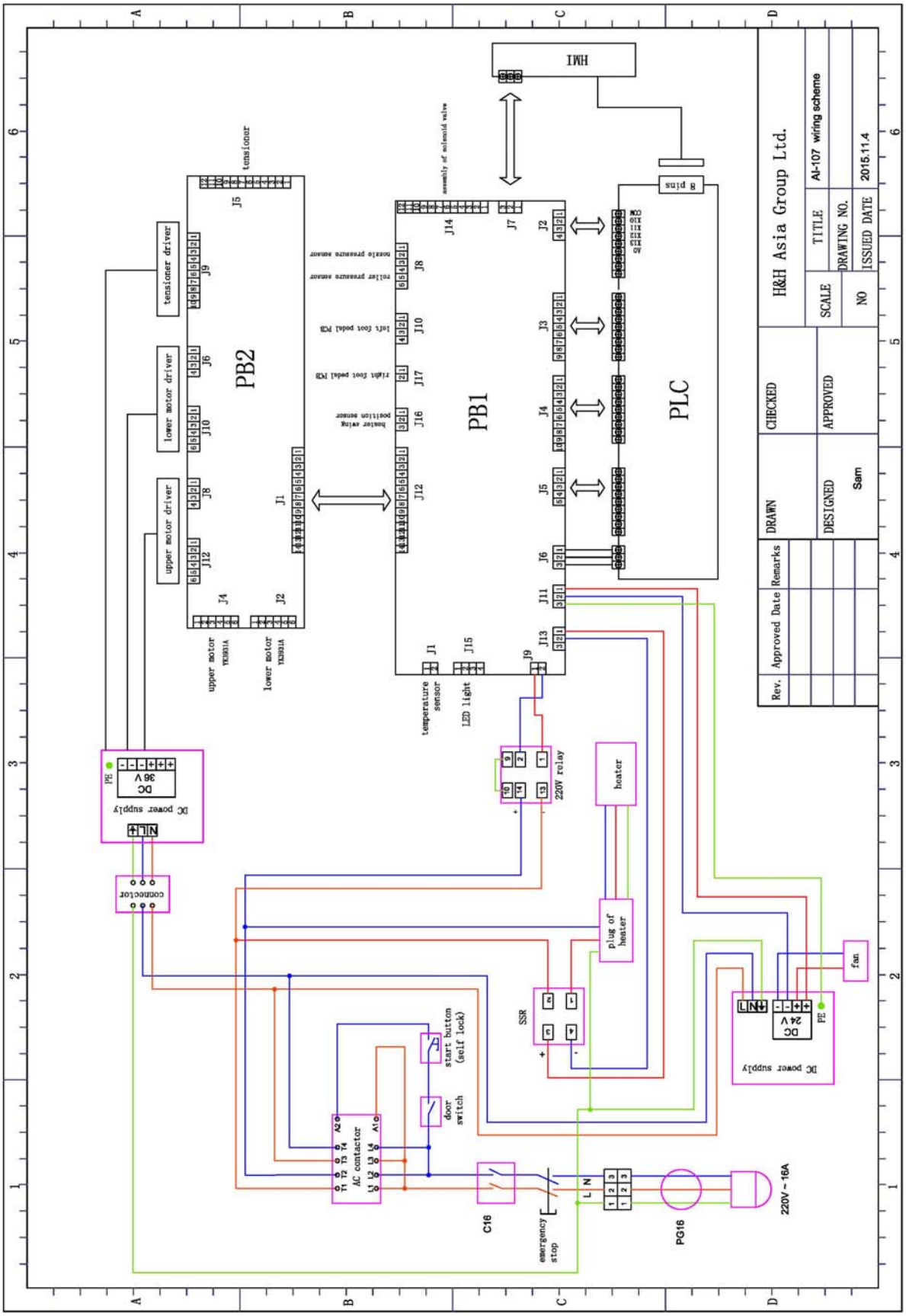

➢ Appendix D PCB connectors

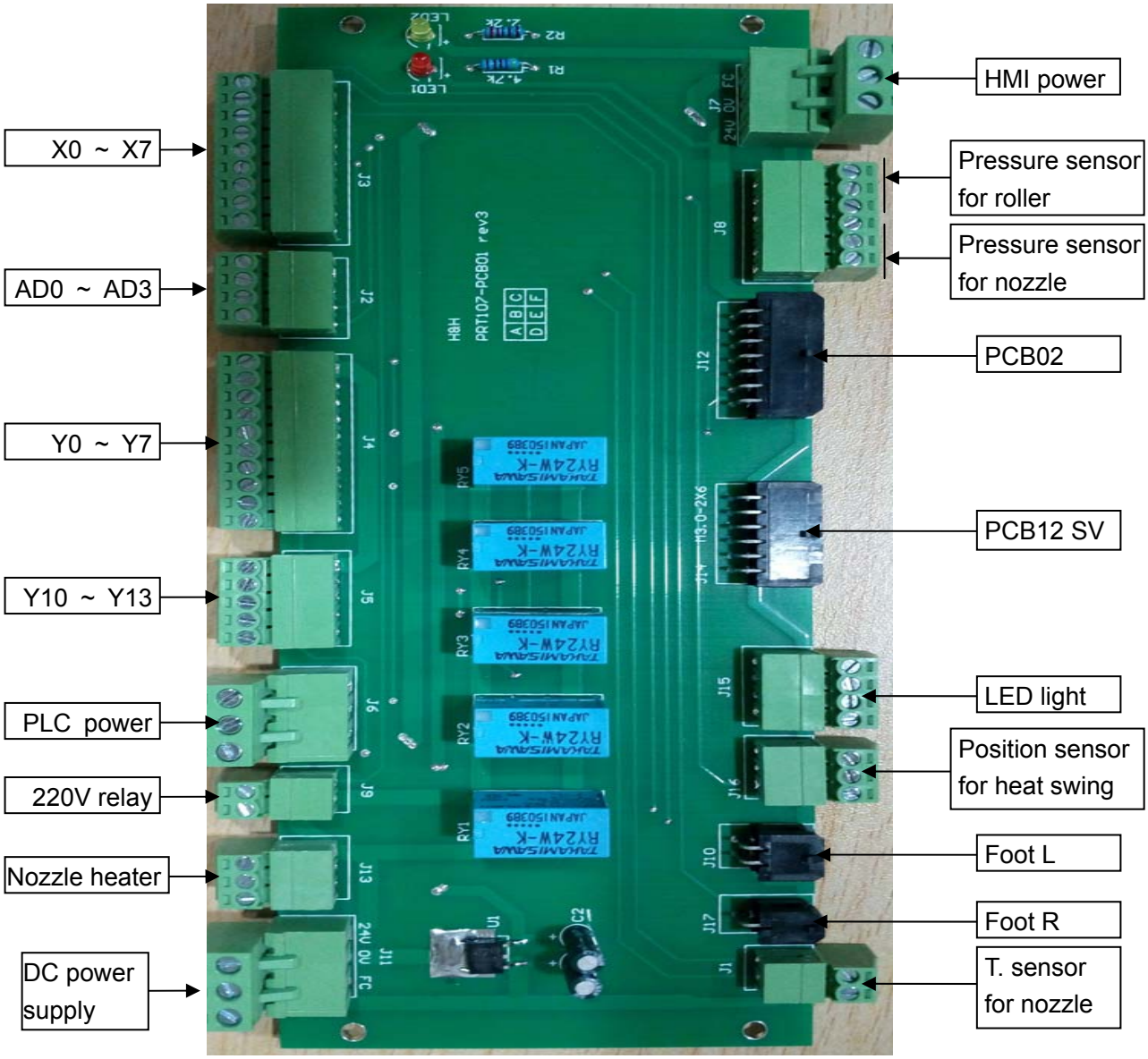

PCB 01

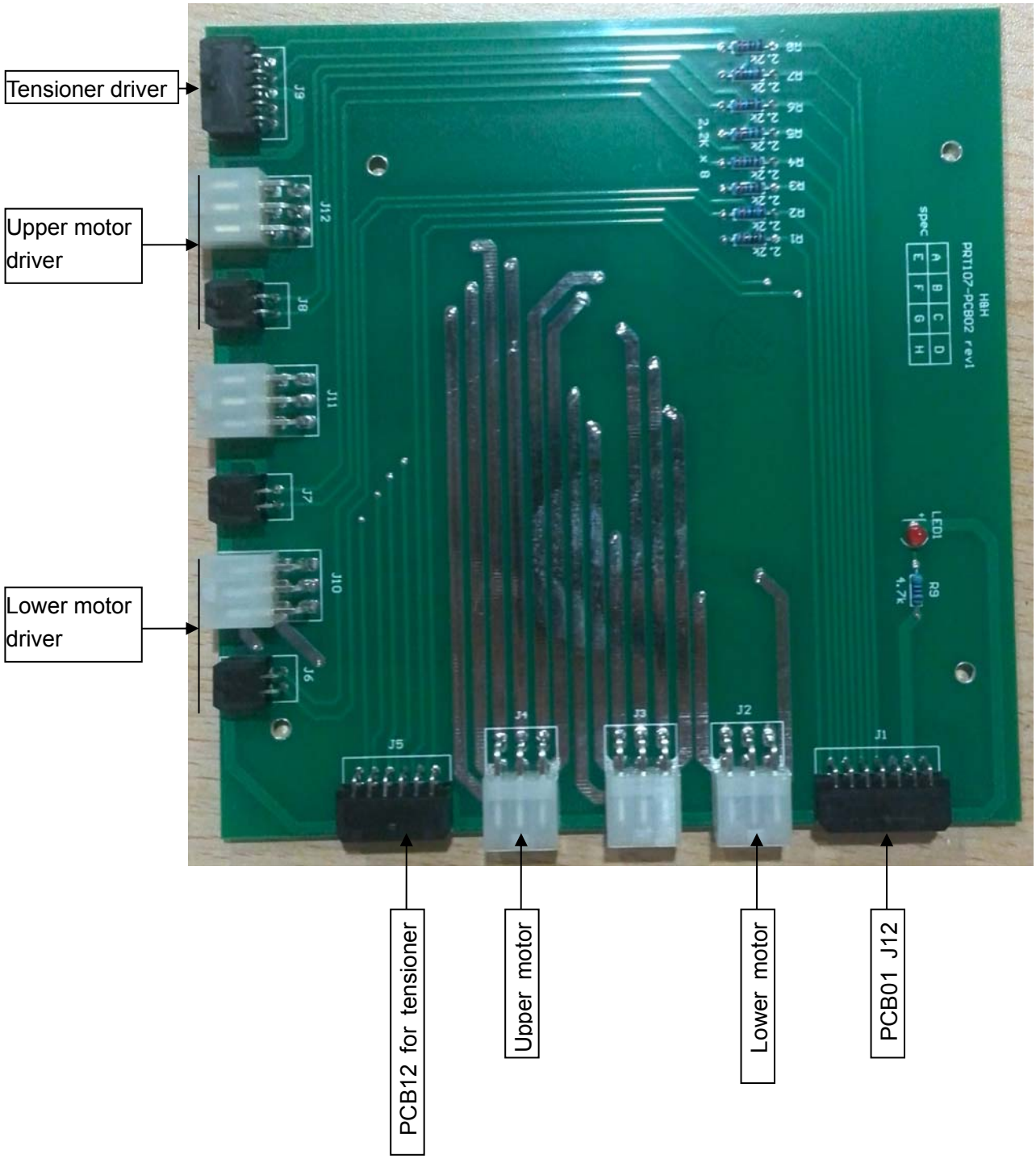
Tensioner driver
Upper motor driver
Lower motor driver
PCB12 for tensioner
Upper motor
Lower motor
PCB01 J12

PCB 02